ALPHA 3 SOLAR LANDSCAPE LIGHT

Solar Lighting Designs

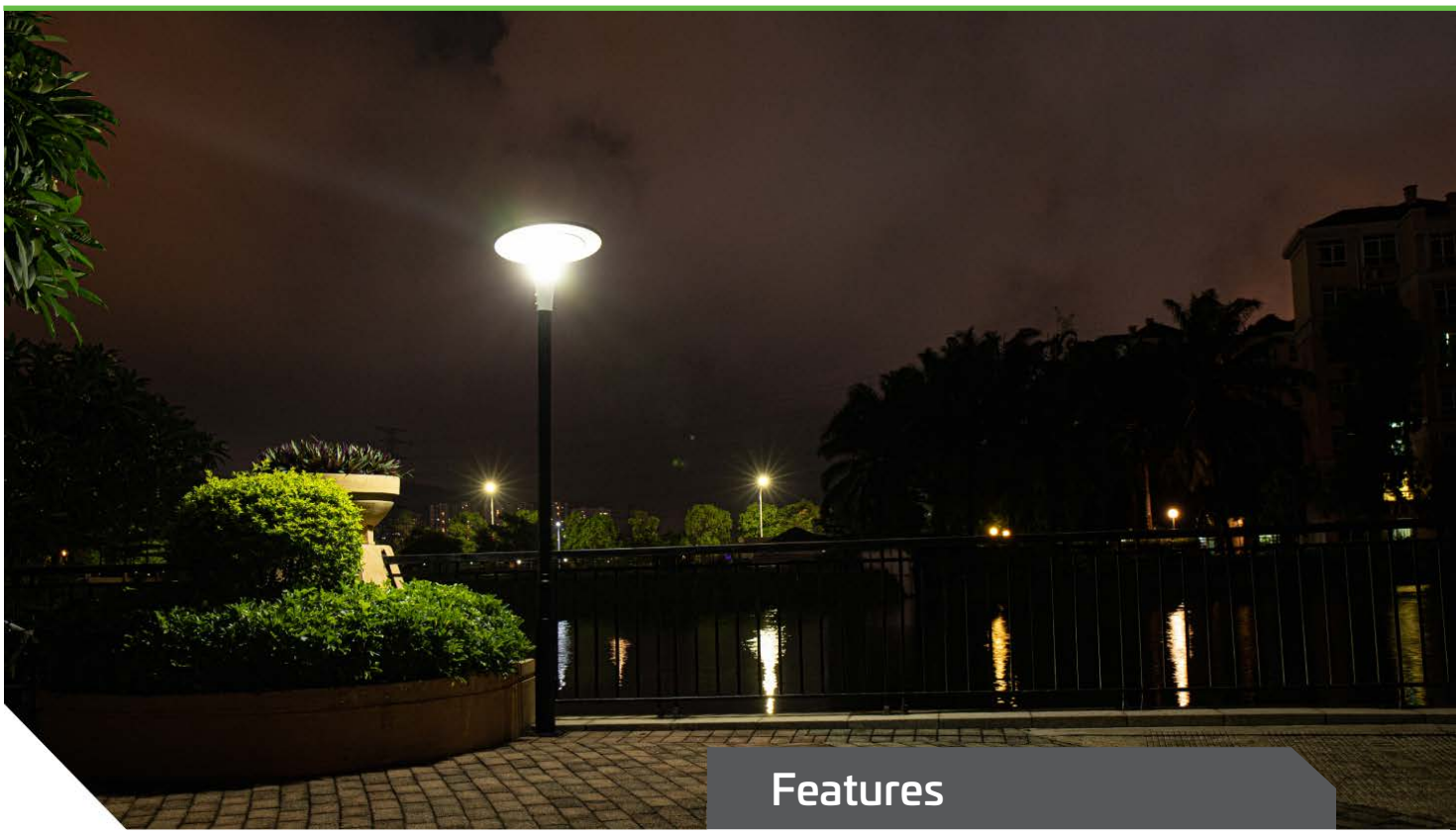

The Alpha range of solar courtyard and landscape lighting has been designed to be aesthetically pleasing and functional with exceptional light output over a wide area. With the body of the light manufactured from cast aluminium with a powdercoated finish they are well protected from the elements. The dual PIR sensors pick up movement, activating the lights when approaching from either direction, this combined with smart lighting control programming ensures superior dusk to dawn lighting without the need for trenching, cabling or an electrician. Designed for use in parks, gardens, driveways, courtyards, these lights will provide a functional feature in the landscape.

Luminaire Height	3 - 4m
Lumen Output	2800 lm
LED Output	18W

Features

- Stylish and functional solar lighting
- Automatic dusk to dawn lighting
- Ideal for illuminating courtyards, walkways and medium-sized areas
- Premium Lithium-Ion battery
- Multi-Function Remote Controlled
- Mounting height of 3- 4 metres
- Fully sealed cast aluminium body in a powder coated black finish
- Premium-grade solar lighting
- Custom powder coated poles manufactured on request
- IK08 impact resistant lens and body
- 5 year warranty for faulty workmanship or component failure not influenced by external means

1300 765 265 SolarLightingDesigns.eco sales@sld.eco

ALPHA 3 SOLAR LANDSCAPE LIGHT SPECIFICATION

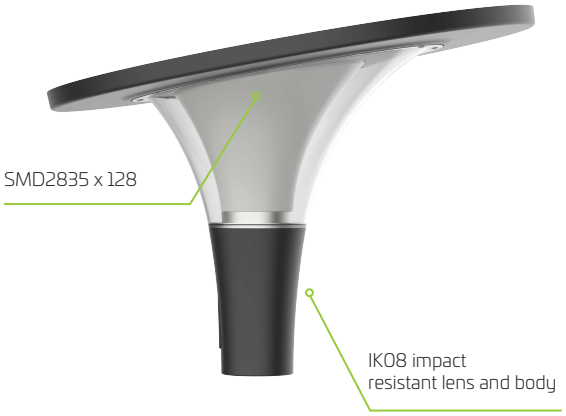

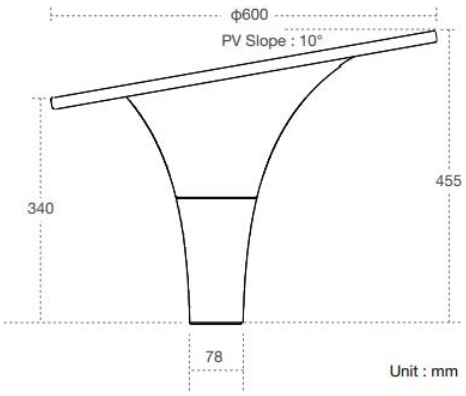

Applications

Parks and gardens | Landscape lighting | Walkways

Technical Data

Solar Panel Wattage	**42W**
LED Output	**18W**
Lumen Output	**2800 lm**
Battery Type	**LiFePO4**
Battery Specifications	**12.30AH 12.8V (153.6Wh)**
Autonomy	**Setting Dependant**
Correlated Colour Temp (CCT)	**Selectable**
Fixture Size	**600mm Dia x 455mm high**
Light Source	**SMD2835 x 128**
Recharge	**+/- 4 hours**
Mounting Height	**3 - 4 metres**
Mounting	**76mm Spigot**
Finish	**Powder-coated cast aluminium**
Warranty Period	**5 years**
SKU	**SOLL013**

Mode of Operation

Multi-Function Remote Operated (Included with light)

- Auto ON at dusk, OFF at dawn different output levels.
- Operate at 30% to 100% output when sensor is triggered.
- Operate at constant output for set time periods (4, 6 or 12H).
- Remote able to change CCT (light colour), to cool white or warm white.

As we continue to improve the products function and/or design specifications and data provided may change without notice. Errors and omissions accepted.

1300 765 265 SolarLightingDesigns.eco sales@sld.eco